No. 703,785. Patented July 1, 1902.

C. HAMANN.

CALCULATING MACHINE.

(Application filed July 2, 1900.)

(No Model.) 4 Sheets—Sheet 1.

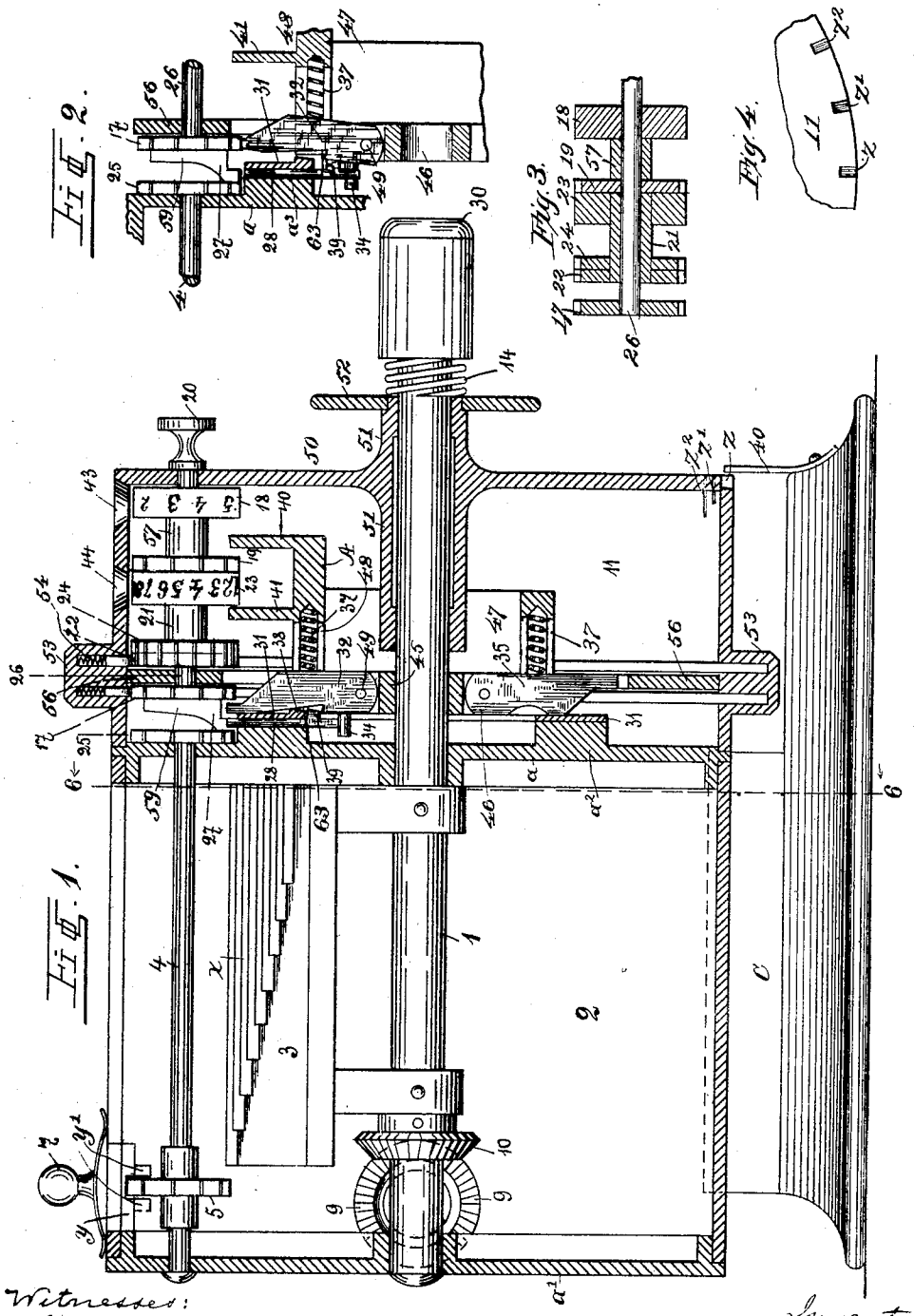

Witnesses:
J. C. Lebret.
A. Hitt.

Inventor:
Christian Hamann,
By H. A. de Vos
Attorney.

THE NORRIS PETERS CO., PHOTO-LITHO., WASHINGTON, D. C.

No. 703,785. Patented July 1, 1902.

C. HAMANN.

CALCULATING MACHINE.

(Application filed July 2, 1900.)

(No Model.) 4 Sheets—Sheet 2.

Fig. 5.

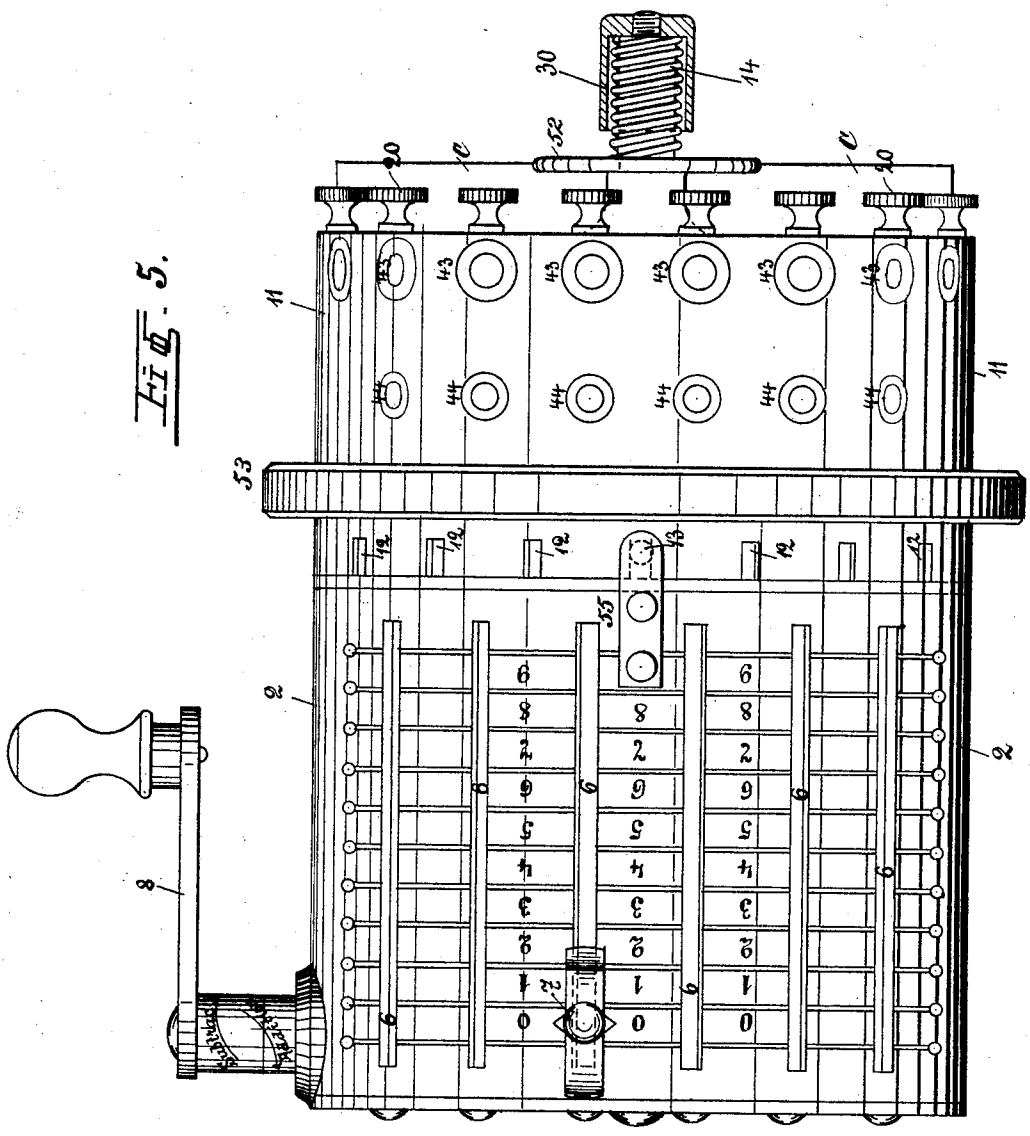

Witnesses:
J. C. Hebert.
A. Witt.

Inventor:
Christian Hamann,
By A. Hale Van
Attorney.

THE NORRIS PETERS CO., PHOTO-LITHO., WASHINGTON, D. C.

No. 703,785. Patented July 1, 1902.

C. HAMANN.

CALCULATING MACHINE.

(Application filed July 2, 1900.)

(No Model.) 4 Sheets—Sheet 3.

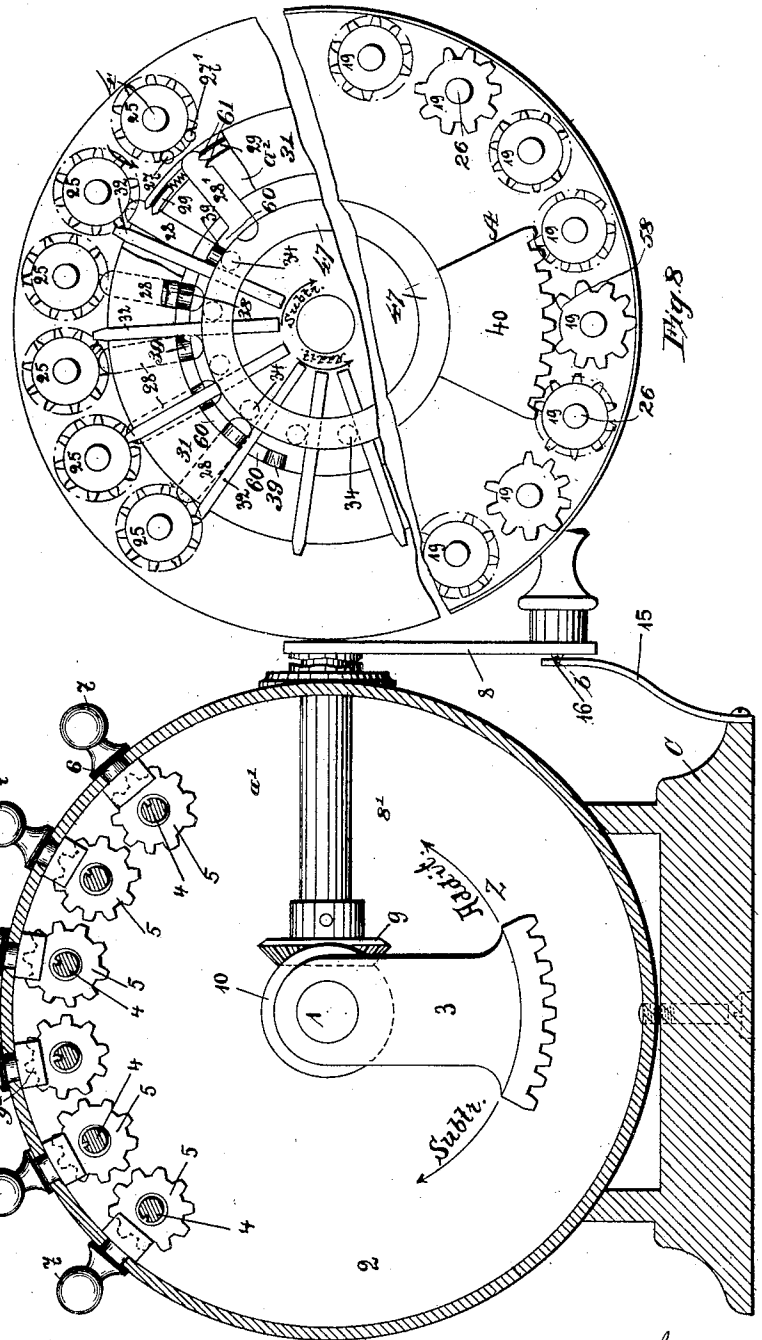

Witnesses:
J. C. Lebret.
A. Witt.

Inventor:
Christian Hamann,
By H. A. de Vos.
Attorney.

THE NORRIS PETERS CO., PHOTO-LITHO., WASHINGTON, D. C.

No. 703,785. Patented July 1, 1902.

C. HAMANN.

CALCULATING MACHINE

(Application filed July 2, 1900.)

(No Model.) 4 Sheets—Sheet 4.

Fig. 10.

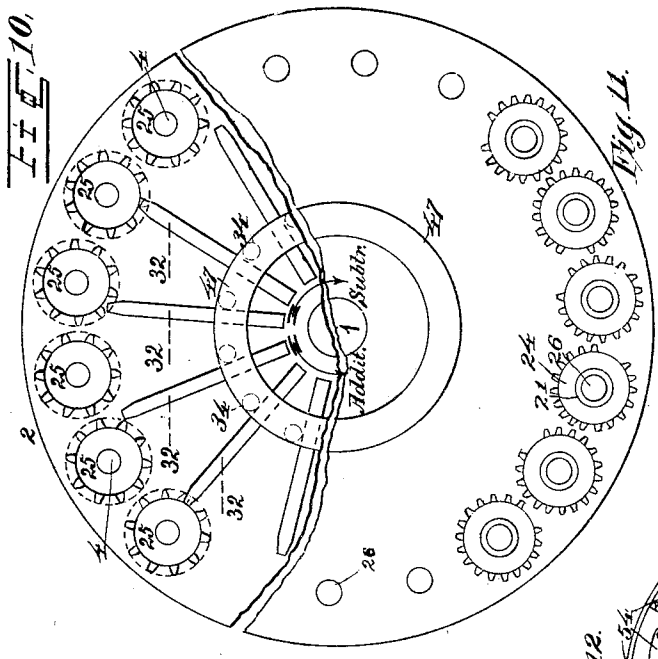

Fig. 11.

Fig. 12.

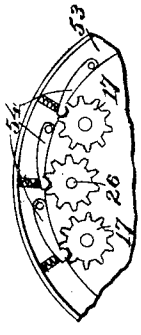

Fig. 9.

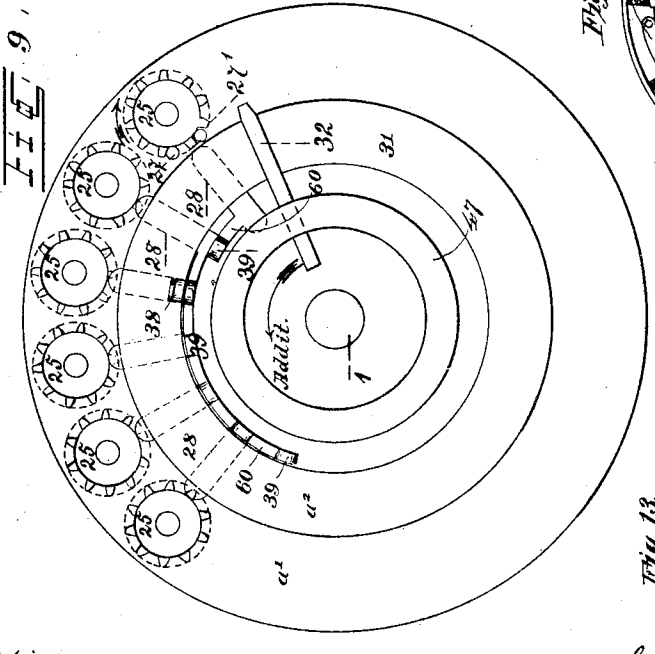

Fig. 13.

Fig. 14.

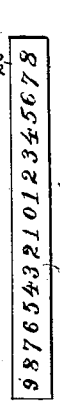

Witnesses:
J. C. Hebert.
A. Witt.

Inventor:
Christian Hamann,
By H. A. de Vos.
Attorney.

THE NORRIS PETERS CO., PHOTO-LITHO., WASHINGTON, D. C.

UNITED STATES PATENT OFFICE.

CHRISTIAN HAMANN, OF BERLIN, GERMANY, ASSIGNOR TO PAUL HAACK, OF BERLIN, GERMANY.

CALCULATING-MACHINE.

SPECIFICATION forming part of Letters Patent No. 703,785, dated July 1, 1902.

Application filed July 2, 1900. Serial No. 22,251. (No model.)

To all whom it may concern:

Be it known that I, CHRISTIAN HAMANN, a subject of the King of Prussia, Emperor of Germany, residing in Berlin, Germany, have invented certain new and useful Improvements in Calculating-Machines, of which the following is a specification.

My invention relates to calculating-machines of the class adapted to perform the various arithmetical operations of addition, subtraction, multiplication, division, and other more complex operations.

The present invention consists in certain improvements in that class of such apparatus in which driving mechanism is used to operate indicating or registering mechanism through the medium of devices the position of which relatively to the driving mechanism determines the amount of movement given to the registering or indicating mechanism.

The object of my invention is to provide an apparatus of this class which while comparatively simple in construction shall be perfectly reliable, easily operated, and not liable to get out of order.

In carrying out my invention in the way now best known to me I provide a driver of simple construction which operates actuators that are connected with the registering or indicating mechanism. The driver consists of a plate provided with a series of ribs or teeth adapted to gear with the teeth of pinions carried by shafts past which the driver moves. The teeth of the driver are stationary or non-adjustable, and preferably the plate is in the form of a segment, which is secured to a main driving-shaft. The teeth on the driver are of different lengths, gradually increasing from one end of the series toward the other end, and are arranged in an arc about the axis of the driving-shaft, with which they are parallel. The pinions, with which the driver is adapted to gear, are mounted on shafts parallel with the axis of the driving-shaft and while always adapted to move with their shafts are adapted to slide thereon, so as to be brought into position to be operated by any number of teeth on the driver or to be entirely disconnected therefrom. The pinions and shafts just referred to constitute what I call the "actuators" for the registering or indicating mechanism. The driving-shaft is operated by suitable well-known mechanism, and the pinions are adjusted on their shafts by means of slides, which move in slots in the casing, on which are marked numbers from "0" to "9," as in other machines of this class.

I would here state that my machine is adapted to the decimal system of notation; but my improvements may be employed in machines wherein notations of other kinds are used.

While I employ but one stepped driver, any desired number of actuators for the registering or indicating mechanism may be used, as the pinions of the actuators are so arranged that any one or all of them may be moved into or out of the path of the driver.

The indicating or registering mechanism consists of wheels or disks bearing the numbers "0" to "9," inclusive, and these wheels are mounted on shafts parallel with the driving-shaft and adapted to be connected with and disconnected from the shafts of the actuators. Each indicator-shaft preferably carries two numbered wheels, one intended for indicating the sum in addition, the remainder in subtraction and division, and the product in multiplication, while the other is primarily intended to indicate the quotient in division; but it also records the multiplier.

The indicator-shafts are arranged in an arc around the axis of the driving-shaft and are mounted in bearings in a part of the casing, which may be turned about the axis of the driving-shaft, so that any one of the indicator-shafts may be brought into line with any one of the actuator-shafts and operatively connected therewith.

In order to perform the operation of what is technically known as "carrying" or "transferring"—that is, when an indicator-wheel has registered nine and the machine is about to register ten (or "0")—I provide novel devices whereby each indicator-shaft is made to operate devices that actuate the next indicator-shaft in the series to properly "carry" or "transfer" the desired number. Briefly stated, these devices consist of sliding dogs adapted to be moved in guides in the frame of the machine and to be operated by projec-

tions on the indicating mechanism, said dogs being adapted to engage with and set pawls that revolve with the driving-shaft and are adapted to connect with the indicating mechanism to properly actuate it. Each of said pawls is adapted to engage with each one of the members of the indicating or registering mechanism.

For simple operations, such as that of addition, only one such pawl is required; but for the operation of subtraction a series of such pawls is used. Another pawl is, however, employed for actuating the wheels of the indicating or registering mechanism which indicate the quotient. This pawl, while revolving with the driving-shaft simultaneously with the others, is operated once in each revolution by a projection or cam on the frame of the machine and at each revolution operates the registering or indicating mechanism in such manner as to indicate the number of complete turns given to the driving-shaft when solving any particular problem. It hence records the quotient in division and the figures of the multiplier, as will hereinafter more fully appear.

In order to return the indicating or registering wheels to zero, toothed segments are employed, which revolve with the driving-shaft and are adapted to gear with mutilated wheels on the indicator-shafts, the arrangement being such that the product-wheels may be returned to zero without disturbing the quotient-wheels, or vice versa, or both sets of wheels may be simultaneously returned to zero.

When performing the operations of addition and subtraction, the positions of the indicator-shafts relatively to those of the actuator-shafts need not be changed; but when dividing or multiplying it is necessary to change these relations. Therefore the indicator-shafts are carried by a part of the casing that is adapted to turn about the axis of the driving-shaft, so that any indicator-shaft may be brought into line with and connected to any actuator-shaft. To do this, the part of the casing carrying the indicating mechanism is adapted to move longitudinally on the driving-shaft and to be turned thereon, locking devices being provided for securely fastening the two parts of the casing together when the proper relation is established.

Other features of the invention and the details of construction will be hereinafter more fully described.

The accompanying drawings show a calculating-machine embodying my improvements in what is believed to be the best and most efficient form. Some parts of the mechanism may be employed without others or in machines differing in other respects from those herein shown. Unless otherwise specified the parts are of usual well-known construction.

The novel features of the invention and the subject-matter claimed are hereinafter designated.

Figure 1 shows a vertical central section made longitudinally through the machine. Only one, however, of the actuator-shafts is shown, and some of the parts are shown in elevation instead of in section. Fig. 2 is a detail view, partly in section and partly in elevation, illustrating particularly the devices employed for connecting the indicator-shafts with the actuator-shafts, and this figure also illustrates a part of the transfer mechanism, some of the parts thereof being in a different position from that shown in Fig. 1. Fig. 3 is a detail view, in longitudinal section, of one of the members of the indicating mechanism. Fig. 4 is a detail view showing part of the devices for limiting the longitudinal movement of the casing of the indicating mechanism relatively to the casing of the driving and actuating mechanism. Fig. 5 shows a top plan view of the machine with some of the pointers or slides omitted and with some parts shown in section. Fig. 6 shows a cross-section of the machine on the line 6 6 of Fig. 1 looking in the direction of the arrows. It illustrates particularly the driving and actuating mechanism. A part of the crank mechanism is broken away. Fig. 7 is a detail view illustrating particularly the construction and operation of the transfer mechanism. Fig. 8 is a detail view illustrating particularly the construction and operation of the devices for returning the indicating mechanism to zero. In this figure the mechanism is reversed or turned upside down. Figs. 9 and 10 are merely diagrams further illustrating the construction and operation of the transfer mechanism. Fig. 11 is a diagram showing the number of indicator-shafts employed and the mutilated wheels thereon which return the quotient-wheels to zero. In this figure the mechanism is turned upside down. Fig. 12 is a detail view illustrating the delay-pawls. Fig. 13 is a diagram illustrating the arrangement of the numbers on the product-wheels. Fig. 14 is a diagram illustrating the arrangement of the double series of numbers on the quotient-wheels.

The different figures of the drawings are not all on the same scale.

The main driving-shaft 1 is shown as being mounted in bearings in the ends a a' of a cylindrical casing 2, which is firmly attached to a bed-plate C. The driving-shaft is operated by a crank 8 at the rear end of the machine outside the casing and secured to a laterally-projecting shaft 8′, which is geared with the driving-shaft 1 by beveled pinions 9 and 10.

As it is desirable to give the driving-shaft one complete turn at each operation of the mechanism, I provide a stop for the handle, consisting, preferably, of a spring-finger 15, attached to the bed-plate and adapted to engage with a lug 16 on the handle. When the handle is in the position shown in Fig. 6, the

stop engages the handle and prevents the free movement thereof; but it is readily disconnected therefrom by the exertion of slight additional force. Each time that the handle engages the stop a click is heard, which notifies the operator that the shaft has been given a complete turn and that the driver has passed by all the actuators. As indicated in Fig. 6, a slight depression *b* is formed in the upper end of the stop to effect the operations above mentioned.

The driver 3, which is arranged within the casing 2 and securely fastened to the driving-shaft, is shown as consisting of a segmental plate provided on its outer surface with a series of longitudinal ribs or teeth *x*, arranged in the arc of a circle around the axis of the driving-shaft. Nine such teeth are employed, and they gradually increase in length from one end of the driver to the other end. The teeth are fixed or rigid, no adjustment of the teeth being required during any part of the operation.

A series of shafts 4, parallel with the driving-shaft, are arranged in an arc about the axis of said shaft outside the path of the driver. These shafts have bearings in the end plates *a a'*, in which they are free to turn without moving endwise. Each shaft 4 carries a pinion 5, provided on its periphery with a continuous series of teeth, and each pinion is connected to the shaft, so as to always revolve therewith while adapted to slide longitudinally thereon. A feather-and-groove connection, such as shown, is the most suitable for this purpose. Slots 6, parallel with the shafts 4 and substantially corresponding in length therewith, are formed in the casing adjacent to the actuator-shafts, and the casing is provided with a series of numbers from "0" to "9," adjacent to each slot. Each pinion 5 may be moved longitudinally along its shaft and set in any desired position relatively to the driver by means of a knob 7, attached to a slide *y*, which moves in the slot 6 and engages the pinion by means of inwardly-projecting lugs *y'*. Similar slides have heretofore been used in machines of this class, and those shown need no further description.

Preferably one end of the driver is arranged close to the end plate *a*, while the other end terminates a short distance from the end plate *a'*, leaving a space which when occupied by the pinions permits the driver to be revolved without actuating them. It is obvious that when one or more of the pinions are moved out of this space they will be brought into engagement with the driver when the latter is revolved, and the amount of movement given to a pinion will depend on the extent of movement longitudinally on the shaft 4 given to the pinion by the knob 7. Thus any pinion may be moved to the extent of from one to nine teeth during one revolution of the driver, the tenth tooth being operated by the next succeeding revolution of the driver, at which time the carrying or transfer mechanism is brought into operation in the manner hereinafter described.

Each actuator 4 has secured to it a wheel 25, provided on its periphery with a continuous series of ten teeth. These toothed wheels are arranged outside the casing 2, the shafts 4 being extended through the end plate *a* for this purpose.

The registering or indicating mechanism is contained within a casing 11 at the front end of the machine that is adapted to move relatively to the casing 2, both longitudinally on the driving-shaft and in an arc about said shaft. The casing 11 is cylindrical in form, like the casing 2, and has a circular end plate 50, formed with a long hub 51, surrounding the driving-shaft, the hub outside the casing being formed with a handle 52, by means of which the casing 11 may be turned either about the axis of the driving-shaft or may be moved longitudinally on said shaft. A cap 30, secured to the projecting end of the driving-shaft 1, has interposed between it and the handle 52 a spiral spring 14. This spring tends to move the casing 11 toward the casing 2. Near its inner end the casing 11 is enlarged, as shown at 53, for the purpose of accommodating delay-pawls 54, such as are commonly employed in this class of machines to prevent the shafts of the indicating or registering mechanism from moving beyond predetermined points. The end of the casing 11 which adjoins the end of the casing 2 is formed with a series of recesses 12, parallel with each shaft of the registering or indicating mechanism, and a lug 13, carried by an arm or plate 55, secured to the casing 2, is adapted to enter successively said recesses 12. These devices permit the casing 11 to be turned about the axis of the driving-shaft relatively to the casing 2 and to then be locked together, so as to prevent further movement of this kind. When adjusting the casing 11 relatively to the casing 2, the former is moved longitudinally against the force of the spring 14 until the lug 13 is free from the recesses 12. Then the casing 11 may be turned about the axis of the driving-shaft, so as to bring any one of the other recesses 12 into line with the lug 13. At this time the casing 11 may be moved toward the casing 12, when the lug 13 will engage the new recess 12, and thus lock the two casings together. By this arrangement any one of the indicator-shafts may be brought into line with any one of the actuator-shafts. This adjustment of the apparatus is incident to the operation of the machine when solving problems in multiplication and division.

The indicator-shafts 26 are mounted in bearings in the outside end plate 50 of the casing 11 and in the annular frame-plate 56, attached to the casing 11 near its inner end. These shafts 26 are parallel with the driving-shaft and are arranged in the arc of a circle, whose radius corresponds with that of the arc in

which the actuator-shafts are arranged. In the machine shown in the drawings eleven indicator-shafts are employed (see Fig. 11) and six actuator-shafts; but this number may of course be varied. Each shaft 26 carries a numbered wheel 18, which I call the "product-wheel," and each of said shafts 26 or part of them, as shown in Fig. 11, also carries another numbered wheel 23, which I call the "quotient-wheel." The product-wheel is securely fastened to the shaft 26, while the quotient-wheel is attached to a sleeve 21, surrounding the shaft 26, but adapted to turn independently thereof. The wheels 18 and 23 are of course provided on their peripheries with suitable series of numbers, the quotient-wheel being provided with two series arranged in reverse order. The arrangement of the figures on the product-wheels is illustrated in Fig. 13, while the arrangement of the figures on the quotient-wheels is illustrated in Fig. 14. A wheel 17, having a continuous series of ten teeth, is secured to the inner end of each shaft 26 between the end plate *a* and the ring 56, while another wheel 19, provided with nine teeth, is secured to each shaft 26 between the quotient-wheel 23 and the product-wheel 18, a sleeve 57 being interposed between the wheels 18 and 19 to separate them. When any of the shafts 26 do not carry quotient-wheels, the wheels 19 may be secured to the shafts in any suitable way. The teeth on the wheel 19 are similar in size and arrangement to the teeth on the wheel 17, except that one tooth is omitted, leaving a blank space 58, Fig. 8, for a purpose hereinafter described.

Each sleeve 21, in addition to carrying a quotient-wheel 23, has firmly secured to it two toothed wheels 22 and 24. Each wheel 22 is formed with a continuous series of eighteen teeth, while each wheel 24 is provided with seventeen teeth, one tooth being omitted for a purpose hereinafter described.

Eighteen teeth are employed on each wheel 22 in order to correspond with the number of figures on the quotient-wheels, as indicated in Fig. 14.

Any one of the indicator-shafts may be turned or set independently of the others by means of a knob or handle 20, and the numbers on the wheels 18 and 23 may be viewed through openings 43 and 44 in the casing.

Each wheel 17 is provided with a coupling-lug 27, adapted to enter the spaces between the teeth on the wheels 25. Each lug is shown as being formed on a base or bracket 59, securely fastened to a wheel 17. Each lug 27 is located directly under the axis of the indicator-shaft when "0" appears in the casing 43 above said shaft. In other words, the lug and the "0" are diametrically opposite to each other.

When the two casings 2 and 11 are together, as shown in Figs. 1 and 2, each indicator-shaft is coupled to the corresponding actuator-shaft which may be in line with it, so that when one of the actuator-shafts is operated by the driver the indicator-shaft coupled with such actuator-shaft is correspondingly operated. The devices described constitute a simple means for coupling and uncoupling the indicator-shafts and actuator-shafts, as by simply moving the casing 11 longitudinally away from the casing 2 the two sets of shafts are uncoupled, while they may be again coupled by simply moving the casing in the opposite direction. When it is desired to couple an actuator-shaft with another indicator-shaft, it is only necessary to move the casing 11 longitudinally away from the casing 2, turn it to the proper extent about the axis of the driving-shaft, and then move it toward the casing 2 again, the lug 27 engaging between the teeth of the proper wheel 25 without further adjustment.

In order to "carry" tens or "transfer," I provide the following mechanism: The end plate *a* is formed with an annular boss a^2, surrounding the driving-shaft, and this boss is formed with a series of radial recesses a^3, in which are arranged a series of radially-sliding dogs 28. The ends of the recesses are closed by an annular plate 31, (shown partly broken away in Fig. 7,) secured to the boss a^2 in the manner clearly indicated in the drawings. The dogs project at both ends from the boss, the upper end of each dog being formed with a double incline, while the lower end carries a laterally-projecting arm 60, carrying a cam 39, arranged close to the lower end of the next succeeding dog in the series. Near its upper end each dog is formed with two notches 61 to receive a spring-actuated dog 29, having a doubly-inclined engaging end, the arrangement being such that any of the dogs 28 may be moved radially inwardly or outwardly by the use of sufficient force, but when this force is withdrawn the dog 29 will engage with one of the notches 60 and hold the dog 28 in one of the two positions determined by the location of the notches. The cams 39 on the sliding dogs 28 are adapted to engage pawls 32, carried by a support 45, secured to the driving-shaft. The support 45 consists of a cylindrical metal casting, the end 46 thereof next the plate *a* being formed with a series of radial recesses in which the pawls 32 are arranged. The flanged portion 47 of the casting is slotted, as shown, to accommodate the movement of the pawls, and sockets 48 are also formed in the flange to accommodate spiral springs 37, which bear against the pawls above their pivots 49 and tend to move the outer ends of the pawls away from the plane of the wheels 17 and against the ring 31. The upper ends of the pawls are adapted to at times engage with the teeth of the wheels 17. The edges of the pawls facing the end plate *a* are recessed at 63 in line with the cams 39 on the dogs 28 when the latter are in their normal or outermost position. A series of pins 34 are secured to the end 46 of the casting close to the pawls 32, just above

their pivots, as clearly indicated in Figs. 1 and 5. The pawls 32 are arranged to follow the movement of the driver—*i. e.*, to operate on the indicator-shafts after the driver has operated on them—and the upper ends of the pawls are wider apart than the indicator-shafts, as shown in Fig. 10. When the dogs 28 are in their normal or outermost position, their upper ends are arranged in the paths of the pins 27, as indicated in Figs. 1 and 7. When an indicator-wheel has registered nine, the coupling-pin thereof will be approximately in the position indicated at 27′ in Fig. 7. When this wheel is advanced one tooth beyond the "9," the pin will pass from the position 27′ to the position 27 in Fig. 9. In doing this the pin will press the dog 28 inwardly, as indicated in Fig. 7, causing the cam 39, carried by the dog, to move into the path of a pawl 32 below the recess 63, so that when said pawl moves past the cam 39 its upper end will be made to engage with the wheel 17 of the adjacent indicator-shaft and will move said wheel the distance of one tooth. By this arrangement when one indicator-wheel moves from "9" to "0," the next adjacent indicator-wheel will be moved the distance of one tooth and will register one. The same operation occurs throughout the series and need not be further described. The dogs 28 are reset by the pins 34, which engage the inner ends of the dogs and move them radially outward, the lower ends of the dogs being curved, as indicated in Fig. 7, to insure a quick and easy movement.

It will be observed that each pawl 32 rotates about the axis of the driving-shaft and is adapted to engage with any one of the wheels 17. When performing simple operations, such as those of addition, only one pawl 32 need be employed; but when performing more complex operations, such as those of subtraction, a series of pawls are necessary; but in any event each pawl 32 is adapted to operate upon any one of the wheels 17. Obviously as soon as the dog 28 is moved outwardly the pawl 32 is free to return to its normal position out of engagement with the wheel 17.

It is obvious that when performing operations in subtraction the borrowing of tens must be effected backward—that is to say, from right to left. Therefore a plurality of radial pawls 32 are employed, the number of pawls corresponding to the number of actuator-shafts, and the angular distance between the pawls at their outer ends is made greater than the distance between the actuator-shafts, as indicated in Fig. 7. The operation of the series of pawls may be thus illustrated: Assuming that one is to be deducted from one hundred thousand, the knob 7 in the last slot to the right is set at "1" and the number "100,000" is "set up" on the products-wheels 18. The driver being given one complete turn moves the units-wheel 18 to the right from "0" to "9," causing the number "100,009" to appear on the wheels 18. In doing this the pin 27 of the units-wheel passes from the position 27 in Fig. 7 to the position 27′ in the same figure, thereby depressing the adjacent sliding dog 28 on the right-hand side of the series before the first pawl 32 on the right has reached the swell or cam 39 on this dog. As said pawl passes over this cam the wheel 25 on the second indicator-shaft from the right is turned a distance of one tooth, and the corresponding indicator-wheel 18 is changed from "0" to "9," the indicator-wheels now showing the number "100,099." While this is being done the pin 27, connecting the second wheels 25 and 17, depresses the second sliding dog 28, and the second pawl 32, passing over the cam on this dog, causes the third indicator-wheel to be turned from "0" to "9." This action is repeated throughout the series in succession, and the number "99,999" will finally appear on the indicator-wheels. In each instance as soon as the pawl 32 has acted a pin 34, placed next to it, lifts the sliding dog 28, which had caused its action, back into its raised position, so that the following pawl passes it without acting again on the wheel 17.

Each quotient-wheel 23 is operated by a pawl 35, preferably arranged at the end of the series of pawls 32. This pawl is constructed and mounted in a manner similar to the pawls 32, being pressed outwardly against the ring 31 by a spring 37; but it is moved into engagement with the wheel 22 of the adjacent indicating-shaft once during each complete turn of the driving-shaft by a lug or cam 38, preferably placed on the ring 31 below the third actuator-shaft, counting from right to left. (See Figs. 7 and 9.) Thus the wheels 23 are made to indicate the number of turns given to the driving-shaft, and therefore records the quotient in division and the figures of the multiplier.

It will be observed that each member of the indicating or registering mechanism is provided with two separate numbered wheels, and each of said wheels is connected with a mutilated wheel, the products-wheel 18 being connected with a mutilated wheel 19 and the quotient-wheel 23 being connected with a mutilated wheel 24. In order to return the indicating-wheels to zero, I employ an actuator A, formed with or secured to the casting 45 and comprising two racks 40 and 41, the former being adapted to gear with the wheels 19 of the several members of the indicating mechanism, while the latter, 41, is adapted to gear with the wheels 24. Normally the racks 40 and 41 are out of engagement with the wheels 19 and 24, as indicated in Fig. 1; but they may be readily moved into engagement with said wheels in the manner hereinafter described. When the indicator-shafts are arranged in an arc around the axis of the driving-shaft, the racks 40 and 41 are of course arc-shaped, and the actuator may most conveniently be made to move about the axis of the driving-shaft, the actu-

ator, in fact, preferably being secured directly to the driving-shaft, so as to turn therewith.

It will be observed by reference to Fig. 1 that the racks 40 and 41 are so arranged that they may be made to engage simultaneously with a wheel 19 and a wheel 24 of each member of the registering or indicating mechanism, or the rack 40 may be made to engage with a wheel 19 without causing the rack 41 to engage the wheel 24, or the rack 41 may engage the wheel 24 while the rack 40 is out of engagement with the wheel 19. Thus the product and quotient wheels may be simultaneously brought back to zero or the products-wheels may be brought back to zero while the quotient-wheels are left undisturbed, or vice versa.

In order to operate the zero mechanism, the casing 11 is moved longitudinally on the driving-shaft, so as to uncouple the indicator-shafts from the actuator-shafts and to cause the actuator A to engage the mutilated wheels of the registering mechanism. It is desirable when operating the zero mechanism to hold the casing 11 stationary. For this purpose I provide a stop 40, adapted to engage the end of the casing 11 and limit its outward movement. As indicated, the casing is provided with a series of openings of different lengths $z\,z'\,z^2$, the arrangement being such that not only is the outward movement longitudinally of the casing 11 limited, but the casing is prevented from moving around the axis of the driving-shaft when the stop 40 engages one of the recesses $z\,z'\,z^2$. When the stop 40 engages the recess z, the rack 40 is in position to engage the wheels 19, while the rack 41 is out of engagement with the wheels 24. When the stop 40 is in the recess z', the racks 40 and 41 simultaneously engage the wheels 19 and 24, and when the stop 40 is in the recess z^2 the rack 41 engages the wheels 24, while the rack 40 is out of engagement with the wheels 19. By simply turning the crank 8 the actuator A may be made to revolve, so as to cause the racks 40 or 41, or either of them, to engage corresponding mutilated wheels on the several members of the registering or indicating mechanism and turn the corresponding numbered wheels to such position that zeros only may be seen through the openings 43 and 44 or through one set of said openings.

The operation of the mechanism has been clearly indicated while describing the construction of the machine; but I will briefly describe the operation of the machine when performing specific examples of arithmetical calculations.

It is assumed that before commencing each operation zeros appear through the openings 43 and 44. Assuming that it is desired to add four hundred and fifty-six and forty-one, the number "456" is set up on the top of the casing 2 by means of the knobs 7, the unit "6" being set up by means of the knob 7 in the slot 6 at the right-hand side of the machine, which corresponds with the units-wheel of the registering mechanism. In a similar manner the number "5" is set up in the next adjacent slot 6 corresponding to the tens-wheel of the registering mechanism, and the number "4" is set up in the next slot 6 corresponding with the hundreds-wheel of the registering mechanism. The operation of setting up the numbers on the scale moves the pinions 5 corresponding with the knobs 7 which were shifted relatively to the driver. The pinion corresponding with the knob 7 which was moved to "4" on the scale is placed in such position relatively to the driver that six teeth of the driver will actuate it when the driver is given one complete turn. In like manner the pinion corresponding with the knob 7 which was moved to "5" on the scale will be actuated by five teeth of the driver, and the pinion corresponding with the knob 7 which was moved to "4" on the scale will be actuated by four teeth of the driver. One complete rotation of the crank 8 in the proper direction will give a complete turn to the driver in the direction indicated by arrow Z, Fig. 6, and the numbers "4 5 6" or "456" will appear in the appropriate wheels 18. Then the number "41" is set up on the scale and the crank is again given a complete revolution in the same direction, causing the driver to move the units-actuator shaft one tooth and the tens-actuator shaft four teeth, and the result "497" will appear on the proper indicator-wheels 18.

Suppose it is desired to add two thousand six hundred and twenty-five to the "497" now appearing on the indicator-wheels 18. This number "2 6 2 5"—"2625"—is set up on the scale and the crank is given one complete turn in the direction for addition. The result "3,122" will then appear on the indicator-wheels 18.

The tens are properly carried. It is not thought necessary to describe here just how it is done, as I have already described the operation of the transfer mechanism.

In performing the above operations three differents numbers were added together— "456," "41," and "2,625"—and the driver was given three complete turns. The quotient-wheel 23 of the units member of the registering mechanism will indicate "3," showing that three different numbers were added together.

In subtracting the operation is the reverse of that in adding. Suppose that two hundred and forty-one is to be subtracted from thirteen hundred and sixty-five. The minuend "1,365" is set up on the wheels 18 by means of the knobs 20. The subtrahend "241" is set up on the scale by means of the knobs 7. The crank is rotated in the direction indicated in the drawings for subtraction and the remainder "1,124" will appear on the wheels 18, the quotient-wheel 23 of the units member showing the figure "1." When performing operations in subtraction, a plurality of

pawls 32 are brought into action in the manner before described.

When multiplying, other parts of the mechanism are brought into use. Assuming that five hundred and thirty-two is to be multiplied by one hundred and twenty-four, the operation is as follows: The casings 2 and 11 are so arranged that the indicator-shaft at the right-hand side of the machine is in line with the right-hand actuator-shaft. The number "532" is then set up on the scale by means of the knobs 7. The crank 8 is then rotated four times in the same direction as that for addition. By this operation "532" is multiplied with the units of the multiplier, (in the present instance "4,") and the number "2,128" will appear on the products-wheels 18. The next operation is to multiply "532" by "20." To do this it is necessary to shift the casing 11 to the right relatively to the casing 2, so as to bring the tens member of the registering mechanism in line with the units-shaft of the actuator. This is done in the manner before described by turning the casing 11 and locking it by means of the lug 13. The crank 8 is then given two complete turns in the direction for addition, and the number "12,768" will appear on the wheels 18. The next operation is to multiply "532" by "100." The casing 11 is shifted one point to the right in the manner above described and the crank 8 is given one complete turn. The product "65,968" will now appear on the wheels 18, while the multiplier "124" will appear on the wheels 23.

If, for instance, six hundred and twenty-five is to be divided by twenty-five, the operation is the reverse of that for multiplication. The indicator-shaft at the left-hand end of the series is brought into line with the left-hand actuator-shaft. The dividend "625" is set up on the proper wheels 18 at the left-hand side of the machine, while the divisor is set up by means of the knobs 7 in the slots at the left-hand side of the casing 2. The crank 8 is turned in the direction for subtraction until the remainder of the dividend is smaller than that of the divisor. After one rotation of the crank the number "375" will appear on the wheels 18. After a second rotation the number "125" will appear on the wheels 18, the divisor "25" being larger than the first two figures of the remainder "12." The casing 11 is now shifted one point to the left, and the crank is turned in the direction for subtraction the necessary number of times until the dividend is fully exhausted, which in the present instance will occur after five rotations of the crank. The wheels 18 now only show zeros, indicating that there was no remainder after the division, while the wheels 23 show the quotient, which is "25." If the dividend had been six hundred and twenty-seven instead of six hundred and twenty-five, the number "2" would appear on one of the wheels 18.

Other examples of the operation of the machine in solving different arithmetical problems might be given; but it is believed that the above illustrations are sufficient to indicate the operation of the machine when used for all the different calculations for which it is adapted.

I claim as my invention—

1. In a calculating-machine the combination of indicating mechanism for showing the results of the calculations, actuators therefor, and a stepped driver, the teeth of which are fixed relatively to each other and which is adapted to engage with and operate one or more of the actuators or all of them.

2. In a calculating-machine the combination of indicating mechanism for showing the results of the calculations, actuators therefor, a stepped driver the teeth of which are fixed relatively to each other and which is adapted to engage with and operate one or more of the actuators or all of them, and means for adjusting the actuators relatively to the driver.

3. In a calculating-machine the combination of indicating mechanism for showing the results of the calculations, actuators therefor, a stepped driver, the teeth of which are fixed relatively to each other and which is adapted to engage with and operate one or more of the actuators, or all of them, and means for adjusting the indicating mechanism relatively to the actuators.

4. In a calculating-machine the combination of a driving-shaft, indicating mechanism, actuators therefor arranged in different radial positions in an arc around the driving-shaft, and a stepped driver revolving about the axis of the driving-shaft, and which is adapted to engage with and operate one or more of the actuators, or all of them during one revolution.

5. In a calculating-machine the combination of a driving-shaft, indicating mechanism, the members of which are arranged in different radial positions in an arc around the axis of the driving-shaft, actuators detachably connected with the indicating mechanism, and a stepped driver revolving about the axis of the driving-shaft, and which is adapted to operate one or more of the actuators or all of them during one revolution.

6. In a calculating-machine the combination of a driving-shaft, indicating mechanism, the members of which are arranged in an arc around the driving-shaft, actuators, the shafts of which are arranged in an arc around the driving-shaft, and which are placed end to end with the shafts of the indicating mechanism, connections between the actuators and the indicating mechanism, and a stepped driver for operating the actuators.

7. In a calculating-machine the combination of indicating mechanism for showing the results of the calculations, actuators therefor, and a single stepped driver, all the teeth of which traverse a fixed path, and which are adapted to engage with and operate one or more of the actuators or all of them.

8. In a calculating-machine the combination of indicating mechanism for showing the results of the calculations, actuators therefor, a stepped driver, the teeth of which are fixed relatively to each other and which is adapted to operate one or more of the actuators or all of them, and means for bringing any one or all of the actuators into the path of the driver or to move them out of the path thereof.

9. In a calculating-machine the combination of indicating mechanism, a single stepped driver, a series of actuator-shafts arranged transversely to the line of movement of the driver, and connected with the indicating mechanism, pinions on the actuator-shafts and means for moving the pinions on the shafts into and out of the path of the driver.

10. In a calculating-machine the combination of indicating mechanism, a driving-shaft, a single stepped driver attached to the driving-shaft, and the teeth of which are arranged in an arc around said shaft, a series of actuator-shafts detachably connected with the indicating mechanism and arranged in an arc around the driving-shaft, pinions on the actuator-shafts, and means for bringing one or more or all of said pinions into operative connection with the driver.

11. In a calculating-machine the combination of indicating mechanism, actuators therefor, a single stepped driver, the teeth of which are fixed, and which is adapted to engage with and operate one or more or all of the actuators at one revolution, and means for connecting any one of said actuators with different parts of the indicating mechanism.

12. In a calculating-machine the combination of a driving-shaft, a single stepped driver secured to the driving-shaft and revolving around the axis thereof, a series of actuator-shafts arranged in an arc around the driving-shaft, adjustable pinions on said actuator-shafts adapted to gear with the driver, a cylindrical casing inclosing the driver, actuator-shafts and pinions, a series of indicator-shafts arranged in an arc around the driving-shaft, and detachably connected with the actuator-shafts, a cylindrical casing inclosing the indicator-shafts and supporting them, means for turning the casing of the indicating mechanism relatively to the casing of the driving mechanism, and devices for locking the two casings together when adjusted.

13. In a calculating-machine the combination with the driving, indicating, and actuating mechanism, of transfer mechanism comprising a pawl adapted to engage with and operate any one of the members of the indicating mechanism, and a series of dogs actuated by the indicating mechanism, and adapted to engage with and set said pawl.

14. In a calculating-machine the combination with the driving, indicating and actuating mechanism, of a series of pawls each of which is adapted to engage with and operate any one of the members of the indicating mechanism, and a series of dogs actuated by the indicating mechanism, and adapted to engage with and set said pawls.

15. In a calculating-machine the combination of a driving-shaft, indicating mechanism, the members of which are arranged in an arc around the driving-shaft, actuating mechanism, connected with the indicating mechanism, and the members of which are arranged in an arc around the driving-shaft, a pawl revolving about the axis of the driving-shaft and adapted to engage with and operate any one of the members of the indicating mechanism, and a series of dogs actuated by the indicating mechanism and adapted to engage with and set said pawl.

16. In a calculating-machine the combination of a driving-shaft, indicating mechanism, the members of which are arranged in an arc around the driving-shaft, actuating mechanism, the members of which are connected with the indicating mechanism, and which are arranged in an arc around the driving-shaft, a driver engaging the actuating mechanism, a series of pawls revolving about the axis of the driving-shaft, and dogs operated by the indicating mechanism and adapted to engage with and set said pawls.

17. In a calculating-machine the combination with the driving, indicating and actuating mechanism, of a recessed, pivoted pawl adapted to engage with and operate the indicating mechanism, and a series of sliding dogs actuated by the indicating mechanism, and provided with laterally-projecting overlapping arms carrying cams adapted to engage with and set said pawl.

18. In a calculating-machine the combination with the driving, indicating and actuating mechanism, of a series of pawls any one of which is adapted to engage with and operate each member of the indicating mechanism, a series of dogs actuated by the indicating mechanism in one direction to engage with and set said pawls, and projections operated by the driver which move the dogs in an opposite direction to disengage them from the pawls.

19. In a calculating-machine the combination of the driving-shaft, the indicating and actuating mechanism, the members of which are arranged in an arc around the driving-shaft, a driver revolving with the driving-shaft, a pawl adapted to engage with each member of the indicating mechanism and revolving about the axis of the driving-shaft, and devices for moving said pawl into and out of engagement with the indicating mechanism.

20. In a calculating-machine the combination with the driving, indicating and actuating mechanism, of coupling devices for connecting the indicating mechanism with the actuating mechanism, sliding dogs moved in one direction by said coupling devices, and a pawl adapted to engage with the indicating

mechanism and which engages with and is set by said dogs.

21. In a calculating-machine the combination with the driving and actuating mechanism, of indicating mechanism, each member of which comprises two numbered wheels adapted to turn independently of each other, and each of which is connected with a separate mutilated gear-wheel, an actuator having two racks for operating said mutilated wheels, and devices for moving the actuator to cause it to engage either one of said mutilated gears, or both of them.

22. In a calculating-machine the combination of a driving-shaft, a driver secured thereto and revolving about the axis thereof, actuators arranged in an arc around the driving-shaft, indicating mechanism comprising a series of members arranged around the driving-shaft, and each comprising two numbered wheels movable independently of each other, a mutilated gear-wheel connected with each of said numbered wheels, an actuator attached to the driving-shaft and provided with two racks arranged in an arc about the driving-shaft and adapted to gear with the mutilated wheels of the indicating mechanism, and means for moving said actuator to cause it to engage either one of said mutilated wheels, or both of them.

23. In a calculating-machine the combination of a stepped driver, actuators adapted to gear with the driver, indicating mechanism connected with the actuators, an actuator for returning the indicating mechanism to zero, said driver, actuators, indicating mechanism and actuator for bringing the indicating mechanism to zero being arranged concentrically about the same axis.

24. In a calculating-machine the combination of a single stepped rotary driver, indicating and actuating mechanism arranged to move about the axis of the driving-shaft, mutilated gear-wheels connected with the indicating mechanism, a toothed segment adapted to engage with said mutilated gear-wheels, but normally out of engagement therewith, and means for engaging said actuator with said mutilated wheels.

In witness whereof I have hereunto set my hand and affixed my name in the presence of two witnesses.

CHRISTIAN HAMANN.

Witnesses:
HENRY HASPER,
WOLDEMAR HAUPT.